Thwing-Albert Instrument Company

More Than a Century of Testing Solutions

14 Collings Avenue, West Berlin, NJ 08091

TA229 Pneumatic Grip

- Clamping force: 1 kN / 7 bar
- Opening: 0-10 mm (depending on jaws)
- Temperature range: 0°C - +70°C (depending on jaws)
  Other temperature ranges on request
- Body: aluminium anodized
- Pneumatic connection: internal thread M5
- Weight: 260 gram per item (without jaws)
- Scope of delivery: 1 pair

Jaws for TA229: Scope of delivery 1 set = 4 jaws

Item number	Surface	Clamping surface H x W	Opening	Weight per pair
TA229-B25	Blank jaws	10 x 25mm	0 – 10mm	18 gram
TA229-BG25	Rubber jaws	10 x 25mm	0 – 8mm	19 gram
TA229-BP25	Pyramid jaws	10 x 25mm	0 – 10mm	17 gram
TA229-BD25	Diamond jaws	10 x 25mm	0 – 10mm	18 gram
TA229-B50	Blank jaws	10 x 50mm	0 – 8mm	46 gram
TA229-BG50	Rubber jaws	10 x 50mm	0 – 6mm	48 gram
TA229-BP50	Pyramid jaws	10 x 50mm	0 – 8mm	43 gram
TA229-BD50	Diamond jaws	10 x 50mm	0 – 8mm	46 gram
TA229-B100	Blank jaws	10 x 100mm	0 – 8mm	92 gram
TA229-BG100	Rubber jaws	10 x 100mm	0 – 6mm	95 gram
TA229-BP100	Pyramid jaws	10 x 100mm	0 – 8mm	86 gram
TA229-BD100	Diamond jaws	10 x 100mm	0 – 8mm	92 gram

Jaws with other dimensions and surfaces on request

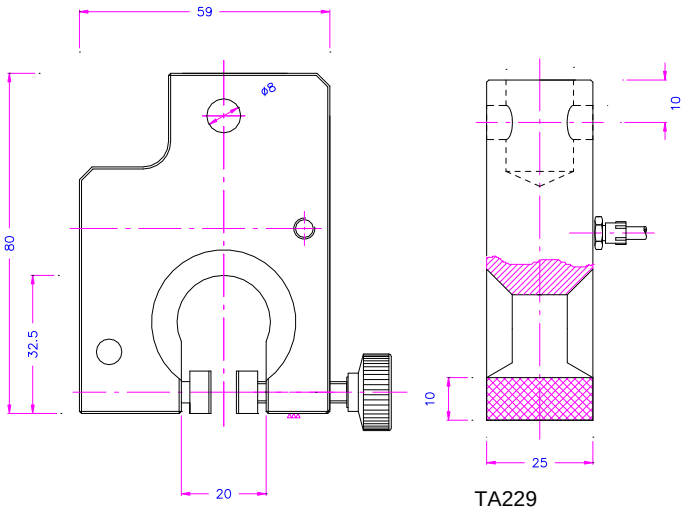

TA229

Blank jaws
- Applicable for own further treatment
- Steel blanks without coating

Rubber jaws
- 1mm rubber coating (NBR)
- Nickel plated

Pyramid jaws
- Pyramids 0.8x45°
- Hardened steel 58 HRC
- Nickel plated

Diamond jaws
- Clamping surface coated with synthetic diamonds
- Nickel plated

Examples for other versions and custom-built solutions:

TA229-BW25

TA229-BLC-R5 - Radius 5 mm

Phone: 856- 767-1000 • Fax: 856-767-2615 • E-mail: info@thwingalbert.com • www.thwingalbert.com

An ISO 9001 Registered Company